FIG.ZG 06 SSSG PN40 DN150 F5

DS-714
Rev.7
For Reference ☑
For Approval ☐

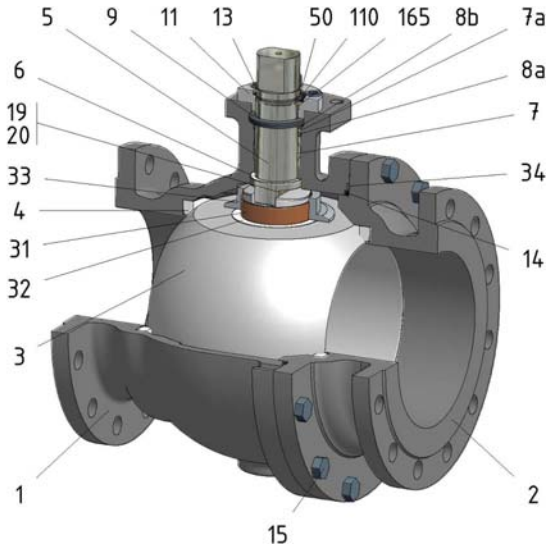

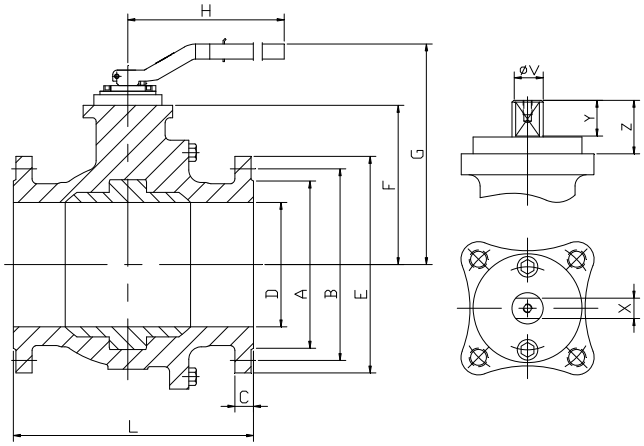

Position	Description	Material
01	Body 1	S.S. 1.4408
02	Body 2	S.S. 1.4408
03	Ball	S.S. 1.4408
04	Seat	PTFE (modified)+CG
05	Stem	S.S. 1.4401
06	Stem seal	PTFE (modified)+CG
07	Stem packing 1	PTFE (modified)+CG
07a	Stem packing 2	Graphite
08a	Gland packing 1	S.S. 1.4401
08b	Gland packing 2	S.S. 1.4401
09	Spring washer	S.S. 1.4310
11	Cover	S.S. 1.4408
13	Cover bolt	A4-70
14	Body seal 1	PTFE (modified)+CG
15	Body bolt	A4-70
16	Handle	WCB
17	Handle bolt	1.045(8.8)
19	Spring	S.S. 1.4401
20	Antistatic ball	S.S. 1.4401
23	Handle pin	S.S. 1.4021
24	Lengthening handle	S.S. 1.0254
31	Bearing	PTFE (modified)
32	Bearing disk	PTFE (modified)+FG
33	Support bearing	S.S. 1.4401
34	Body seal 2	Graphite
50	Subjection ring	S.S. 1.4021
110	Subjection ring seal	S.S. 1.4401 Nitrided
165	Stem bearing	PTFE (modified)+FG

General features

Guided ball.
Split body.
Full bore.
Soft seat.
Bidirectional.
Anti Blow out proof stem.
Autoadjustable packing.
Anti static device.
Self-cavity pressure relief.

Standards

Top flange ISO 5211
Flanges EN 1092-01
Face to face EN 558
Testing EN-12266, ISO 5208
Design EN-12516, ISO 17292

Official approvals

CERTIFICATE FIRE SAFE
TÜV.AD-MERKBLATT A4
TA-LUFT VDI 2440
ISO 15848-1
ATEX 2014/34/EU
PED 2014/68/EU
SIL 3 CAPABLE
EN 161/EN ISO 23553-1

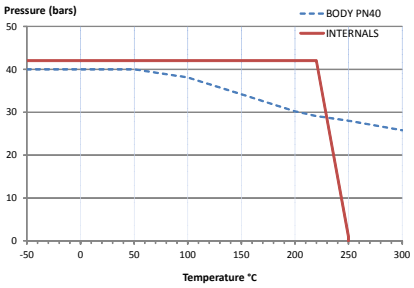

PEKOS GROUP CERTIFICATES:
ISO 9001-2008 / 2014/68/EU /API-6D

DIMENSIONS & Technical information

DN	*PN*	*D*	*L*	*E*	*A*	*B*	*C*	*F*	*H*	*G*	*V*	*X*	*Y*	*Z*	*n x d*	*ISO 5211*	*Torque*	*MAST*	*Weight*
150	40	150	350	300	218	250	28	176	740	285	36	27	35	50	8 x 26	F12	730	1073,4	83

*** Depending on service conditions.* ** Dimensions are in mm.* ** Torque & MAST are in Nm.* ** Weight is in Kilogram*
** Torque values have been measured ΔP at maximum rating at room temperature*

Rec del Molinar, 9-P-I. El Circuit - 08160 Montmeló (Barcelona)-Spain

Tel.: (+34) 93 568 92 56

pekos@pekos.es

-The contents of this document are subject to change without prior notice due to the continuous development processes.